HSMx-A4xx-xxxxx
SMT LED Surface Mount LED Indicator

Data Sheet

Lead (Pb) Free
RoHS 6 fully
compliant



Description

Avago Power PLCC-4 is an extension of our PLCC-2 SMT LEDs. The package can be driven at higher current due to its superior package design. The product is able to dissipate heat more efficiently compared to the conventional PLCC-2 SMT LEDs. In proportion to the increase in driving current, this family of LEDs is able to produce higher light output compared to the conventional PLCC-2 SMT LEDs.

These SMT LEDs have higher reliability and better performance and are designed to work under a wide range of environmental conditions. This higher reliability makes them suitable for use under harsh environment and conditions like automotive. In addition, they are also suitable to be used in electronic signs and signals.

To facilitate easy pick and place assembly, the LEDs are packed in EIA-compliant tape and reel. Every reel will be shipped in single intensity and color bin (except for red color), to provide close uniformity.

These LEDs are compatible with IR solder reflow process. Due to the high reliability feature of these products, they also can be mounted using through-the-wave soldering process.

There are a variety of colors and various viewing angles (30°, 60° and 120°) available in these SMT LEDs. Ideally, the 30° parts are suitable for light piping where focused intensities are required. As for the 60° and 120°, they are most suitable for automotive interior and exterior lighting and electronic signs applications.

Features

- Industry standard PLCC-4
- High reliability LED package
- High brightness using AlInGaP and InGaN dice technologies
- High optical efficiency
- Higher ambient temperature at the same current possible compared to PLCC-2
- Available in full selection of colors
- Super wide viewing angle at 120˚
- Available in 8mm carrier tape on 7-inch reel
- Compatible with both IR and TTW soldering process
- JEDEC MSL 2a
- High reliability LED package due to enhanced silicone resin material for InGaN family

Applications

- Interior automotive
  - Instrument panel backlighting
  - Central console backlighting
  - Cabin backlighting
  - Navigation and audio system
  - Dome lighting
  - Push button backlighting
- Exterior automotive
  - Turn signals
  - CHMSL
  - Rear combination lamp
  - Puddle light
- Electronic signs and signals
  - Interior full color sign
  - Variable message sign
- Office automation, home appliances, industrial equipment
  - Front panel backlighting
  - Push button backlighting
  - Display backlighting

CAUTION: *HSMN-, HSMK-, HSMM-A40x-xxxxx LEDs are Class 2 ESD sensitive. Please observe appropriate precautions during handling and processing. Refer to Avago Application Note AN-1142 for additional details.*

Package Dimensions

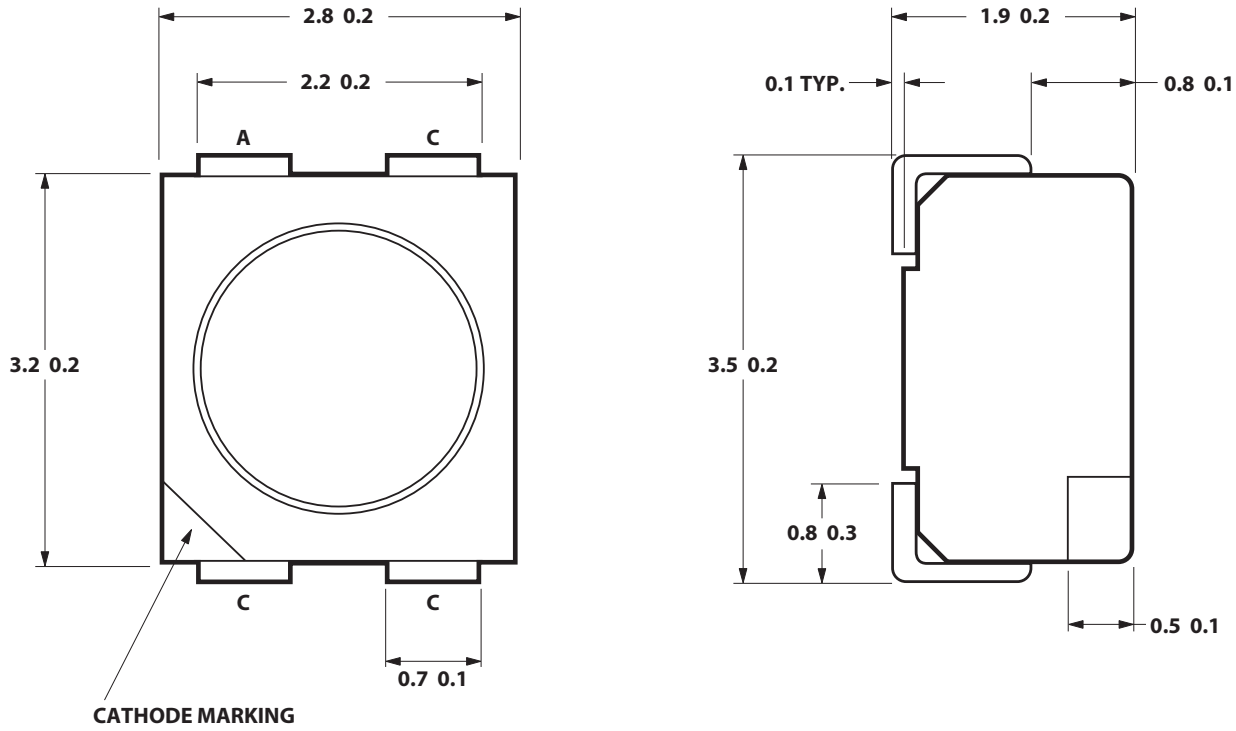

NOTES:
ALL DIMENSIONS IN mm.
ELECTRICAL CONNECTION BETWEEN ALL CATHODES IS RECOMMENDED.

Device Selection Guide

Color	Part Number	Min. I_V (mcd)	Max. I_V (mcd)	Test Current (mA)	Dice Technology
Red	HSMC-A400-S30M1	180.00	355.00	50	AlInGaP
Red Orange	HSMJ-A401-T40M1	285.00	715.00	50	AlInGaP
	HSMJ-A401-U40M1	450.00	1125.00	50	AlInGaP
Orange	HSML-A401-U40M1	450.00	1125.00	50	AlInGaP
Amber	HSMA-A401-U45M1	450.00	1125.00	50	AlInGaP
Emerald Green	HSME-A401-P4PM1	45.00	112.50	50	AlInGaP
Blue	HSMN-A400-S8QM2	224.00	560.00	30	InGaN
	HSMN-A400-S8PM2	224.00	560.00	30	InGaN
	HSMN-A400-S4QM2	180.00	450.00	30	InGaN
Green	HSMM-A400-U4QM2	450.00	1125.00	30	InGaN

Notes:
1. The luminous intensity I_V, is measured at the mechanical axis of the lamp package. The actual peak of the spatial radiation pattern may not be aligned with this axis.
2. I_V tolerance = ±12 %.

Part Numbering System

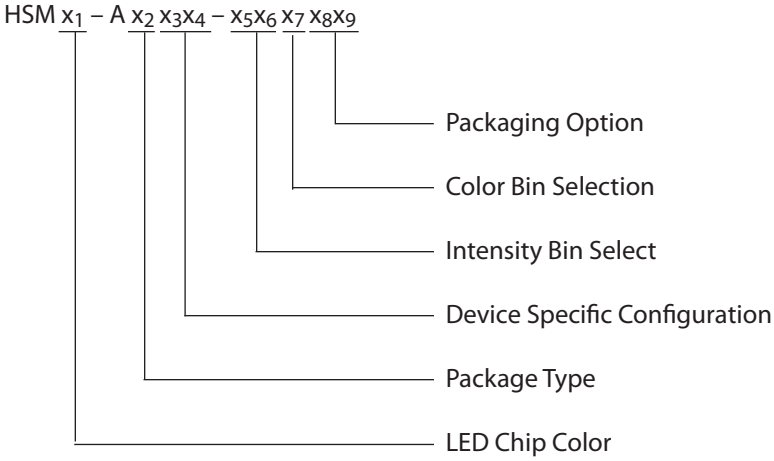

Absolute Maximum Ratings (T_A = 25°C)

Parameters	HSMC/J/L/A/E	HSMZ/V/U	HSMM/K/N
DC Forward Current[1]	70 mA[3,4]	70 mA[3,4]	30 mA
Peak Forward Current [2]	200 mA	200 mA	90 mA
Power Dissipation	180 mW	240 mW	114 mW
Reverse Voltage		5 V	
Junction Temperature		110°C	
Operating Temperature		–40°C to +100°C	
Storage Temperature		–40°C to +100°C	

Notes:
1. Derate linearly as shown in figure 5.
2. Duty factor = 10%, Frequency = 1 kHz.
3. Drive current between 10 mA and 70 mA is recommended for best long-term performance.
4. Operation at currents below 5 mA is not recommended.

Optical Characteristics ($T_A = 25°C$)

Color	Part Number	Peak Wavelength λ_{PEAK} (nm) Typ.	Dominant Wavelength λ_D[1] (nm) Typ.	Viewing Angle $2\theta_{1/2}$[2] (Degrees) Typ.	Luminous Efficacy η_v[3] (lm/W) Typ.	Luminous Intensity/ Total Flux I_v (mcd)/Φ_v (mlm) Typ.
Red	HSMC	635	626	120	150	0.45
	HSMZ	639	630	120	155	0.45
Red Orange	HSMJ	621	615	120	240	0.45
	HSMV	623	617	120	263	0.45
Orange	HSML	609	605	120	320	0.45
Amber	HSMA	592	590	120	480	0.45
	HSMU	594	592	120	500	0.45
Yellow Green	HSME	576	575	120	560	0.45
Emerald Green	HSME	568	567	120	610	0.45
Green	HSMM	518	525	120	500	0.45
Cyan	HSMK	502	505	120	300	0.45
Blue	HSMN	468	470	120	75	0.45

Notes:

1. The dominant wavelength, λ_D, is derived from the CIE Chromaticity Diagram and represents the color of the device.
2. $\theta_{1/2}$ is the off-axis angle where the luminous intensity is 1/2 the peak intensity.
3. Radiant intensity, I_e in watts/steradian, may be calculated from the equation $I_e = I_v/\eta_v$, where I_v is the luminous intensity in candelas and η_v is the luminous efficacy in lumens/watt.

Electrical Characteristics ($T_A = 25°C$)

Part Number	Forward Voltage V_F (Volts) @ $I_F = 50$ mA Typ.	Max.	Reverse Voltage V_R @ 100 µA Min.
HSMC/J/L/A/E	2.2	2.5	5
HSMZ/V/U	2.8	3.4	5

Part Number	Forward Voltage V_F (Volts) @ $I_F = 30$ mA Typ.	Max.	Reverse Voltage V_R @ 10 µA Min.
HSMM/K/N	3.8	4.6	5

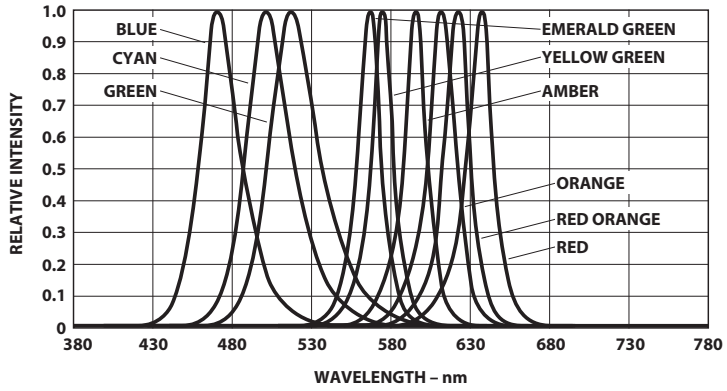

Figure 1. Relative intensity vs. wavelength

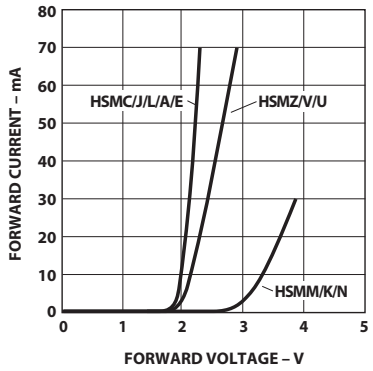

Figure 2. Forward current vs. forward voltage

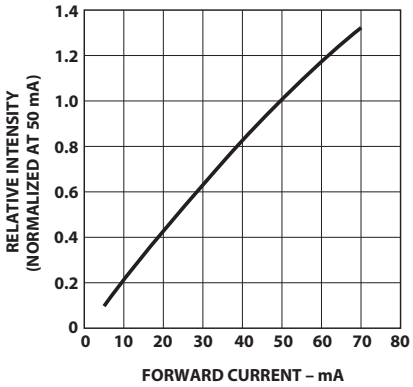

Figure 3. Relative intensity vs. forward current (AlInGaP)

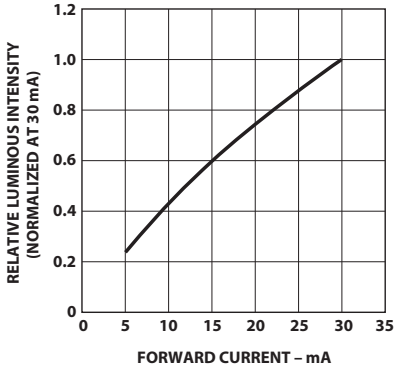

Figure 4. Relative intensity vs. forward current (InGaN)

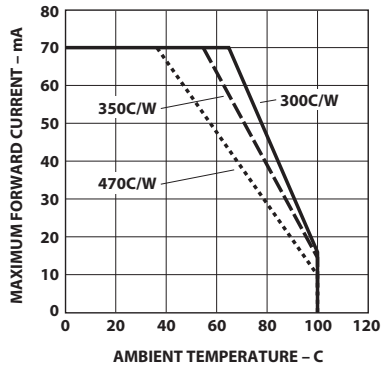

Figure 5a. Maximum forward current vs. ambient temperature, derated based on $T_J$max = 110°C (AlInGaP)

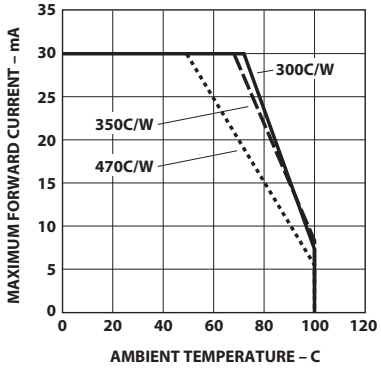

Figure 5b. Maximum forward current vs. ambient temperature, derated based on $T_J$max = 110°C (InGaN)

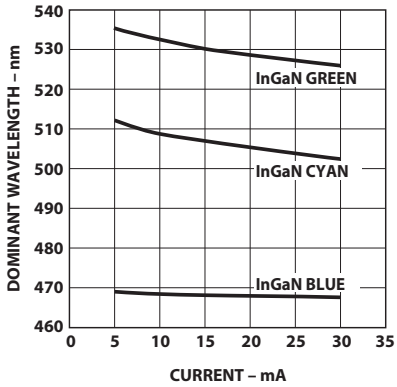

Figure 6. Dominant wavelength vs. forward current – InGaN devices

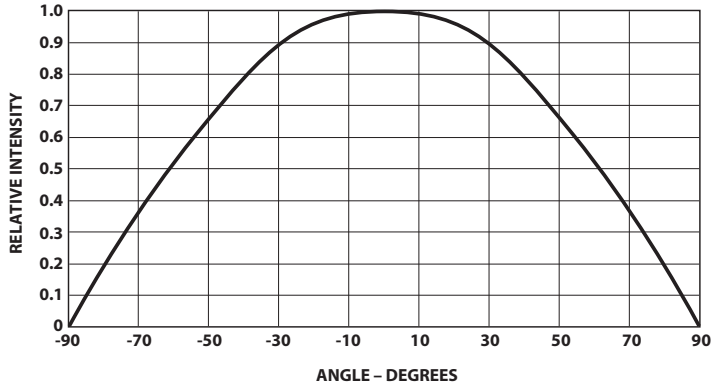

Figure 7. Radiation pattern

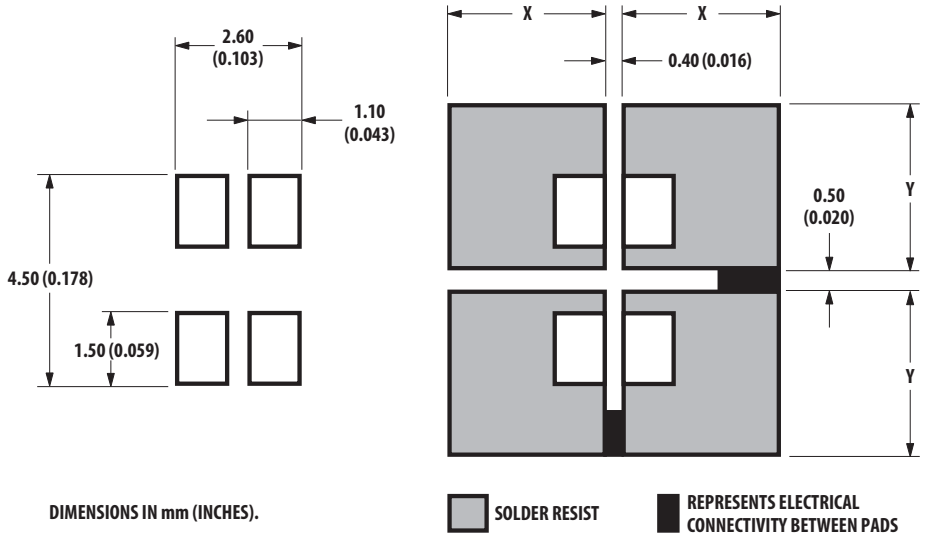

Figure 8a. Recommended soldering pad pattern

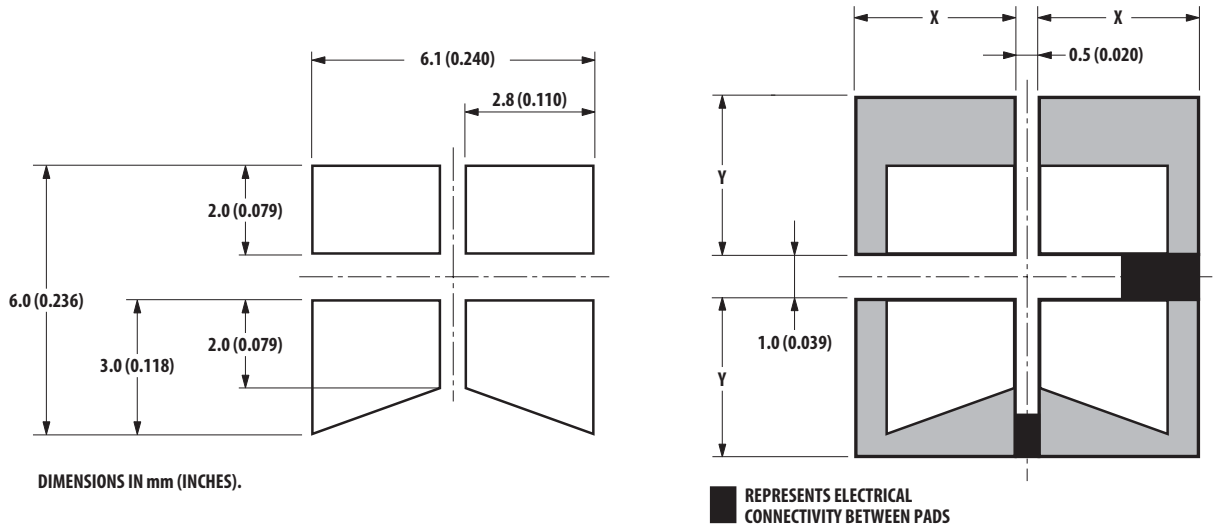

Thermal Resistance	Solder Pad Area (xy)
300°C/W	>16 mm^2
350°C/W	>12 mm^2
470°C/W	>8 mm^2

Figure 8b. Recommended soldering pad pattern (TTW)

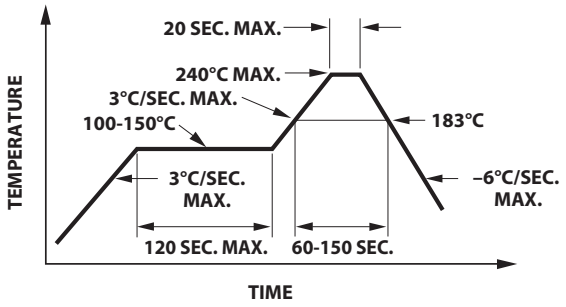

Figure 9a. Recommended SnPb reflow soldering profile

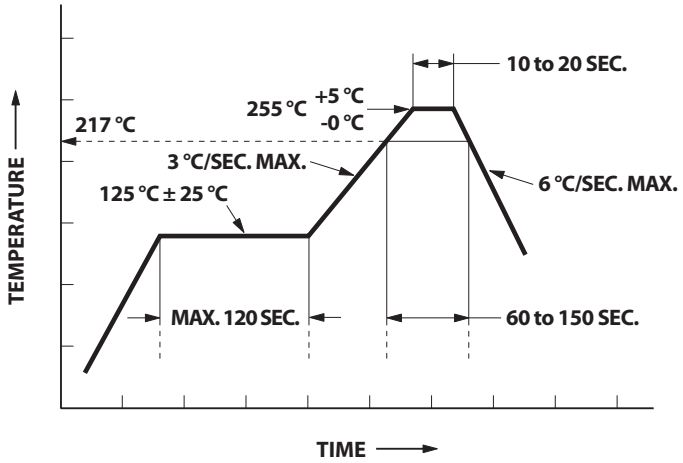

Figure 9b. Recommended Pb-free reflow soldering profile.

Note: For detailed information on reflow soldering of Avago surface mount LEDs, refer to Avago Application Note AN 1060 *Surface Mounting SMT LED Indicator Components*.

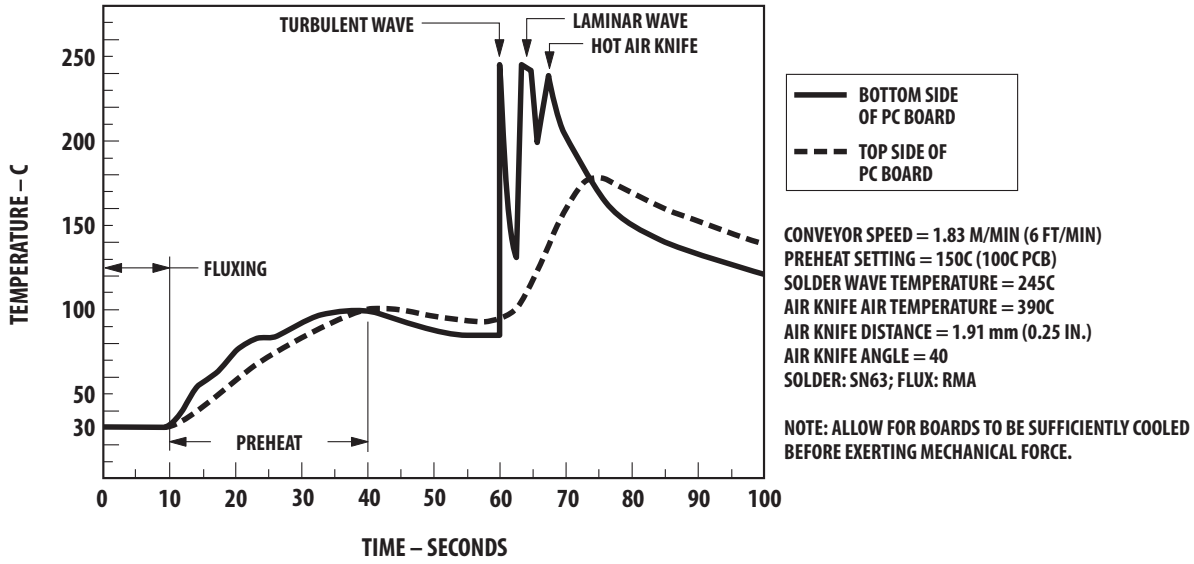

Figure 10. Recommended wave soldering profile

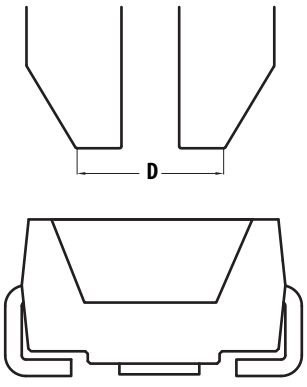

Note: Diameter "D" should be smaller than 2.2mm

Figure 11. Recommended Pick and Place Nozzle Size for InGaN Family

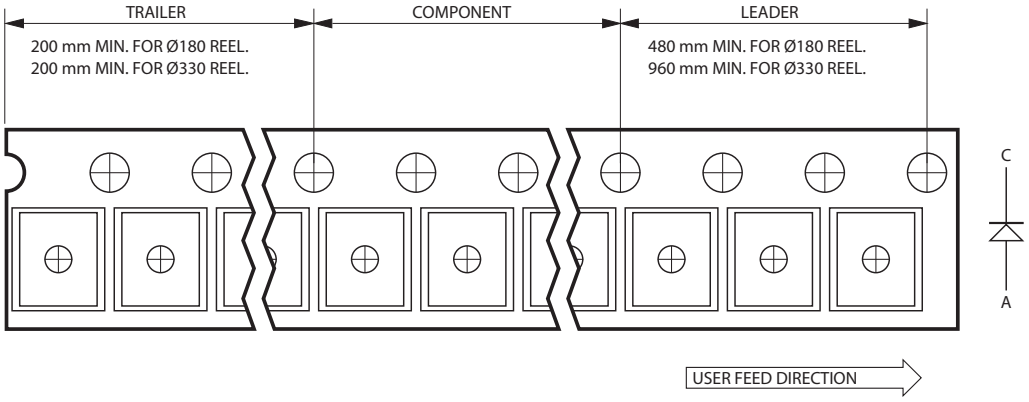

Figure 12. Tape leader and trailer dimensions

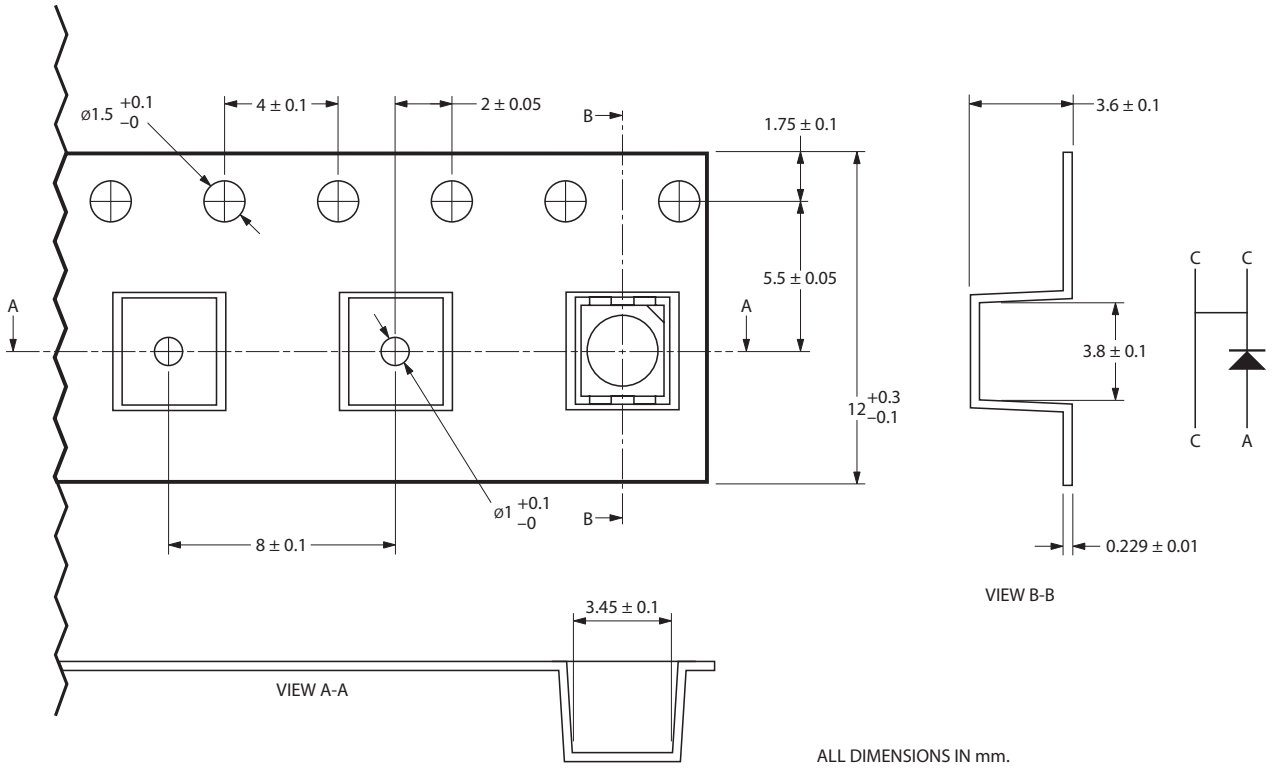

Figure 13. Tape dimensions

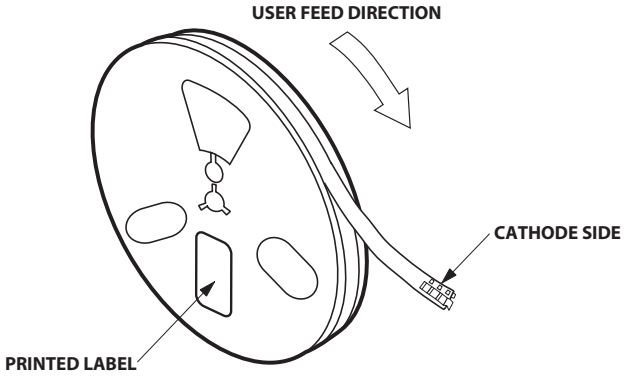

Figure 14. Reeling orientation

Intensity Bin Select (X_5X_6)

Individual reel will contain parts from one half bin only.

X_5	Min. Iv Bin

X_6	
0	Full Distribution
2	2 half bins starting from $X_5$1
3	3 half bins starting from $X_5$1
4	4 half bins starting from $X_5$1
5	5 half bins starting from $X_5$1
6	2 half bins starting from $X_5$2
7	3 half bins starting from $X_5$2
8	4 half bins starting from $X_5$2
9	5 half bins starting from $X_5$2

Intensity Bin Limits

Bin ID	Min. (mcd)	Max. (mcd)
N1	28.50	35.50
N2	35.50	45.00
P1	45.00	56.00
P2	56.00	71.50
Q1	71.50	90.00
Q2	90.00	112.50
R1	112.50	140.00
R2	140.00	180.00
S1	180.00	224.00
S2	224.00	285.00
T1	285.00	355.00
T2	355.00	450.00
U1	450.00	560.00
U2	560.00	715.00
V1	715.00	900.00
V2	900.00	1125.00
W1	1125.00	1400.00
W2	1400.00	1800.00

Tolerance of each bin limit = ± 12%

Color Bin Select (X_7)

Individual reel will contain parts from one full bin only.

X_7	
0	Full Distribution
Z	A and B only
Y	B and C only
W	C and D only
V	D and E only
U	E and F only
T	F and G only
S	G and H only
Q	A, B and C only
P	B, C and D only
N	C, D and E only
M	D, E and F only
L	E, F and G only
K	F, G and H only
1	A, B, C and D only
2	E, F, G and H only
3	B, C, D and E only
4	C, D, E and F only
5	A, B, C, D and E only
6	B, C, D, E and F only

Color Bin Limits

Blue	Min. (nm)	Max. (nm)
A	460.0	465.0
B	465.0	470.0
C	470.0	475.0
D	475.0	480.0

Cyan	Min. (nm)	Max. (nm)
A	490.0	495.0
B	495.0	500.0
C	500.0	505.0
D	505.0	510.0

Green	Min. (nm)	Max. (nm)
A	515.0	520.0
B	520.0	525.0
C	525.0	530.0
D	530.0	535.0

Color Bin Limits

Emerald Green	Min. (nm)	Max. (nm)
A	552.5	555.5
B	555.5	558.5
C	558.5	561.5
D	561.5	564.5

Yellow Green	Min. (nm)	Max. (nm)
E	564.5	567.5
F	567.5	570.5
G	570.5	573.5
H	573.5	576.5

Amber/ Yellow	Min. (nm)	Max. (nm)
A	582.0	584.5
B	584.5	587.0
C	587.0	589.5
D	589.5	592.0
E	592.0	594.5
F	594.5	597.0

Orange	Min. (nm)	Max. (nm)
A	597.0	600.0
B	600.0	603.0
C	603.0	606.0
D	606.0	609.0
E	609.0	612.0

Red Orange	Min. (nm)	Max. (nm)
A	611.0	616.0
B	616.0	620.0

Red	Min. (nm)	Max. (nm)
Full Distribution		

Tolerance of each bin limit = ± 1 nm

Packaging Option (X_8X_9)

Option	Test Current	Package Type	Reel Size
M1	50 mA	Top Mount	7 inch
M2	30 mA	Top Mount	7 inch

Forward Voltage Bin Table
For HSMZ/V/U – A4xx-xxxxx only

BIN	MIN.	MAX.
VA	1.9	2.2
VB	2.2	2.5
VC	2.5	2.8
VD	2.8	3.1
VE	3.1	3.4

Tolerance of each bin limit = ± 0.05

Moisture Sensitivity

This product is qualified as Moisture Sensitive Level 2a per JEDEC J-STD-020. Precaution when handling this moisture sensitive product is important to ensure the reliability of the product. Refer to Avago Application Note AN 5305 Handling of Moisture Sensitive Surface Mount Devices for details.

A. Storage before use

- Unopen moisture barrier bag (MBB) can be stored at <40°C/90% RH for 12 months. If the actual shelf life has exceeded 12 months and the HIC indicates that baking is not required, then it is safe to reflow the LEDs per the original MSL rating.
- It is not recommended to open the MBB prior to assembly (e.g., for IQC).

B. Control after opening the MBB

- The humidity indicator card (HIC) shall be read immediately upon opening of MBB.
- The LEDs must be kept at <30°C/60% RH at all times and all high temperature related processes, including soldering, curing or rework, need to be completed within 672 hours.

C. Control of unfinished reel

- Unused LEDs need to be stored in sealed MBB with desiccant or in desiccator at <5% RH.

D. Control of assembled boards

- If the PCB soldered with the LEDs is to be subjected to other high temperature processes, the PCB needs to be stored in sealed MBB with desiccant or in desiccator at <5% RH to ensure no LEDs have exceeded their floor life of 672 hours.

E. Baking is required if:

- "10%" is Not blue and "5%" HIC indicator turns pink.
- The LEDs are exposed to conditions of >30°C/60% RH at any time.
- The LEDs' floor life exceeds 672 hours.

Recommended baking conditions: 60±5°C for 20 hours.

Handling Precautions

The encapsulation material of the InGaN family product is made of silicone for better reliability of the product. As silicone is a soft material, please do not press on the silicone or poke a sharp object onto the silicone. These might damage the product and cause premature failure. During assembly or handling, the unit should be held on the body only. Please refer to Avago Application Note AN 5288 for detail information.

For product information and a complete list of distributors, please go to our website: **www.avagotech.com**

Avago, Avago Technologies, and the A logo are trademarks of Avago Technologies in the United States and other countries.
Data subject to change. Copyright © 2005-2010 Avago Technologies. All rights reserved. Obsoletes AV01-0312EN
AV02-0479EN - May 6, 2010